LiGHT SKY

www.lightsky.com.cn

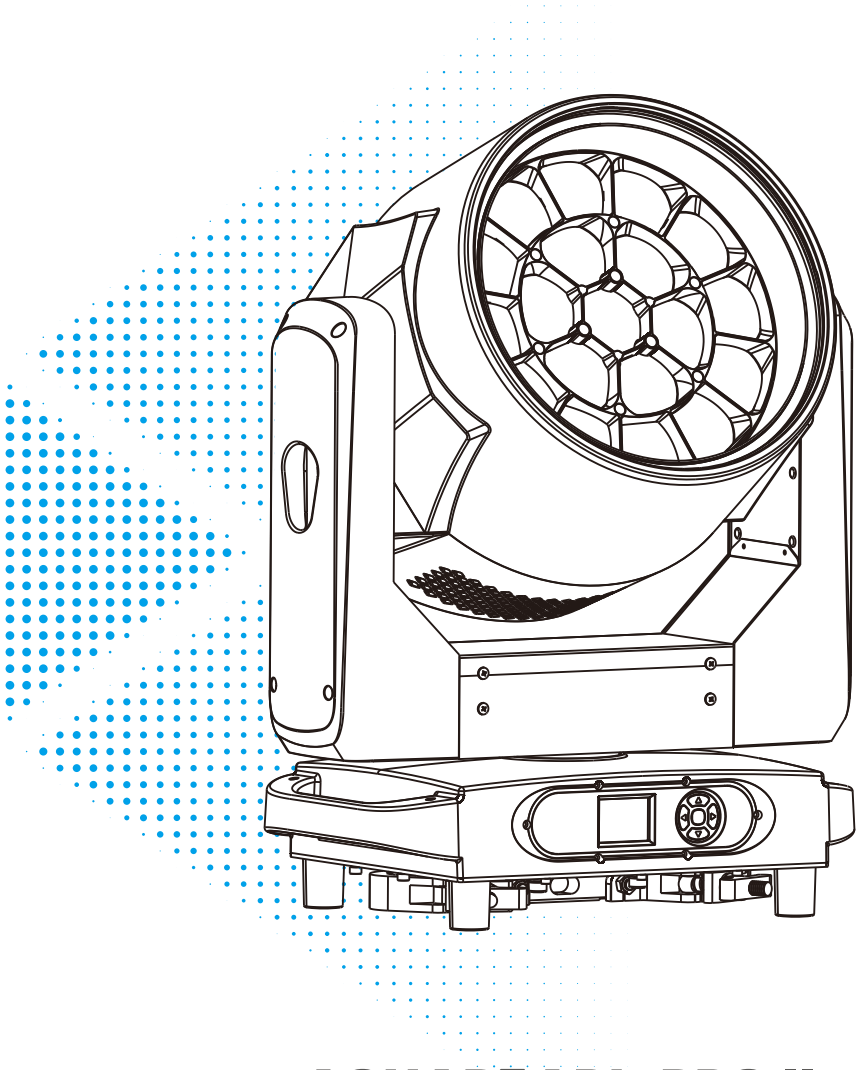

AQUAPEARL-PRO II

User Manual

Please read the instruction carefully before use

Fly Dragon Lighting Equipment Co., Ltd.

Add : NO.4 JINGNENG ROAD 1, HUADU DISTRICT, GUANGZHOU, CHINA.
Tel : 020-61828288 Fax : 020-61828188 Postal Code : 510820
Email : flydragon@lightsky.com.cn

Social Media

LiGHT SKY Wechat

CONTENTS

1. Safety Instructions 2

2. Technical Specifications 5

2.1. Attachment And Size 7

3. Connection and control 9

3.1. Power supply connection 9

3.2. DMX 512 Connection 10

3.3. Control Panel 11

4. How To Set The Unit 12

4.1. Main Function 12

4.2. Address Setting 14

4.3. DMX 512 Configuration 15

5. Electrical Connection Diagram 30

6. Troubleshooting 31

7. Fixture Cleaning 33

8. Duty exonerative and copyright protection 33

Congratulations on choosing our company product! We thank you for your custom.

- Please keep in mind that this product, like other products of the company, adheres to the concept of people-oriented design and manufacture, and takes product quality as the foundation.
- We put the interests of customers first, and do our best to meet customer requirements.
- Please read this instruction manual carefully and keep it for future reference. In the case of fully understanding the product information, strictly abide by theUse the instruction manual to ensure that the product is installed, used and serviced correctly and safely.
- Our company is not responsible for any damage to lamps or other performance due to personal failure to follow the instructions during installation, use and maintenance.responsibility.
- Our company reserves the right to modify the manual at any time and without prior notice.

1.Safety Instructions



WARNING

Please read the instruction carefully which includes important information about the installation, usage and maintenance.

Please keep this User Manual for future consultation. If you sell the unit to another user, be sure that they also receive this manual.

The following symbols are used to identify important safety information on the product and in this manual:



WARNING! Safety hazard. Risk of severe injury or death.



WARNING! Refer to manual betore installing, powering or servicing.



WARNING! Hazardous voltage. Risk of severe or lethal electric shock.



WARNING! Fire hazard.



WARNING! Burn hazard. Hot surface.not touch.Do not touch



WARNING! Risk of eye injury.Safety glasses must be worn.



WARNING! Risk of hand injury.Safety gloves must be worn.



WARNING! Avoid direct eye contact



DANGER! Applies only to luiminaires directly mounted on surfaces of non-combustible materials



DANGER! Do not discard Trash can



DANGER! Mark of ground



DANGER! Replace all shatter shields



DANGER! Take a short distance from the object to be photographed (meters)



DANGER! Rated maximum ambient temperature



DANGER! Do not point the lens towards the sun or strong light



DANGER! Operation not allowed during runtime

Important:

Damages caused by the disregard of this user manual are not subject to warranty. The dealer will not accept liability for any resulting defects or problems.

— Unpack and check carefully to ensure that there is no transportation damage before using the unit.

— Do install and operate by qualified operator.

— The light source in this luminaire should be replaced by the manufacturer or its service agent or a similarly qualified person, always cut off the power supply before replacing he light source.

— Do not allow children to operate the fixture.

— Use safety chain when fixing the unit. Handle the unit by carrying its base instead of head only.

— The unit must be installed in a location with adequate ventilation, at least 50cm from adjacent surfaces.

— Be sure that no ventilation slots is blocked, otherwise the unit will be overheated.

— Before operation, ensure that you are connecting this product to the proper voltage in accordance with the specifications in this manual or on the product's specification label.
— It's important to ground the yellow/green conductor to earth in order to avoid electric shock.
— Minimum ambient temperature Ta: -20°C. Maximum ambient temperature Ta: 45°C.
— Do not operate this product at a lower or higher temperature.
— Do not connect the device to any dimmer pack.
— When the lamp is running, do not place combustible objects next to it. The shortest distance between the device and inflammable and explosive objects or materials is 1 m.
— Make sure the power cord is not crimped or damaged; replace it immediately if damaged.
— Unit's surface temperature may reach up to 65°C. Do not touch the housing bare-handedduring its operation.
— Avoid any flammable liquids, water or metal from entering the unit. Once it happens, cut off the mains power immediately.
— Do not operate in a dirty or dusty environment. Do clean the fixture regularly.
— Do not touch any wire during operation as there might be a hazard of electric shock.
— Avoid entanglement of the power cord with other wires.
— The distance between the luminaire and the irradiated surface shall be greater than 3 meters.
— Do not shine light directly into another fixture's lens. Intense beam can damage internal components.
— Direct sunlight or any other strong light beam penetrating the front lens of the luminaire can cause severe internal damage. During unpacking, installation, operation, and xtended idle periods outdoors, it is prohibited to expose the front lens of the luminaire to beams of direct sunlight or any other strong light source from any angle.

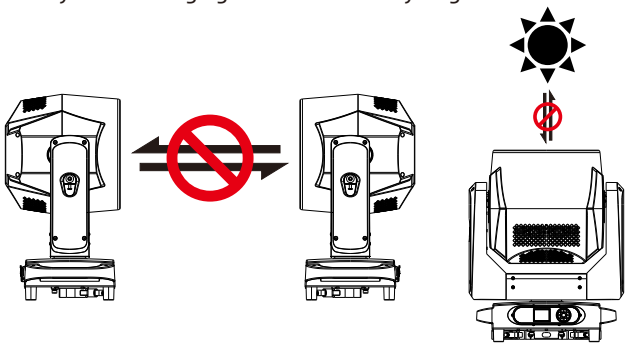

— In the event of serious operating problem, stop using the unit immediately.
— Never turn on and off the unit time after time.
— The housing, the lenses, or the ultraviolet filter must be replaced if they are visibly damaged.

— Do not open the housing as there are no user serviceable parts inside.
— Do not attempt to operate this unit if it becomes damaged. Do not attempt any repairs yourself. Repairs carried out by unskilled people can lead to damage or malfunction. Please contact the nearest authorized technical assistance center if needed.
— Disconnect this product from its power source before servicing.
— Do use the original packaging if the device is to be transported.
— Avoid direct eye exposure to the light source while the product is on.
— Do not operate this product if you see damage on the housing, shields, or cables. Have the damaged parts replaced by an authorized technician at once.

Installation:

The luminaire must be securely fastened to the quick-lock hook with screws to prevent vibration or slipping during operation. The supporting structure must be able to withstand 6 times the weight of the luminaire. Additionally, a safety cable must be installed that can endure 30 free-fall drops from 300mm without failure. Installation should only be performed by qualified professionals, and the luminaire must be mounted in an area inaccessible to unauthorized personnel or away from pedestrian traffic.

2.Technical Specifications

OPTICS

- Light source: 19 × 40W RGBW LED
- Beam angle: 5 °~25 °
- Spot angle: 7 °~45 °
- Color temperature: 2500K-10000K
- Illuminance: 32000 lx @ 5 m
- Luminous flux: 9700 lm
- Average lifespan of light source: 20000h
- Utilizes the iCC ™ Color Calibration System.

EFFECT

- Color Mixing System: Uniform RGBW Color Mixing System and Rainbow Effect.
- Zoom system: linear electric zoom.
- Single point control: The light source supports independent control of a single element, with outstanding transformation effects.
- Front aperture: The front aperture can be controlled at a single point, allowing for free pursuit of flowing color changing effects.
- Effect macros: static effect macros and dynamic effect macros functions.
- Dimming: Electronic dimming, providing four dimming curves+four dimming frequencies+four dimming speeds.
- Strobe: 1-25Hz electronic strobe and random strobe.

CONTROL AND PROGRAMMING

- Control channels: Standard 26CH, 98CH, 28CH, 100CH, 35CH. Please refer to the channel table for details.
- Control protocols: Standard DMX512 protocol, RDM protocol, Art Net protocol, sACN protocol.
- Data connection: Three core or five core signal input/output
- Display: LCD screen

SOFTWARE

- Upgrade software through DMX signal interface
- Intelligent temperature control ensures LED lifespan

X/Y AXIS MOTION ANGLE

- X-axis: 540 ° (8-bit/16bit precision scanning)
- Y-axis: 218 ° (8-bit/16bit precision scanning)
- Reset function with automatic error correction
- Fixed lock: Y-axis lock

POWER

- Input voltage: AC 100-240V 50/60Hz
- Maximum power: 730W

- Power factor: 0.977
- Maximum current of the lamp: 3.32A/220V, 7.3A/100V

SIZE AND WEIGHT

- Product size: 440 × 333 × 567mm
- N.W.: 25.0 kg
- Carton packaging (default): 515 × 415 × 675mm
- G.W.: 30.3 kg
- Flycase Size(2 units): 860x550x760mm
- G.W.: 90.9 kg

OTHER

- Protection level: Ip66
- Work environment:- 20℃~45℃
- Maximum surface temperature of lamp body: 65℃
- Hook: Suitable for pipes with a diameter of 40-60 mm

APPROVALS

- The product implementation standard: IEC 60598-1、IEC 60598-2-17
- Approved certifications: CE、RoHs
- The product complies with the following EU directives:
  Low Voltage Directive 2014/35/EU . EMC Directive 2014/30/EU

Illumination Diagram

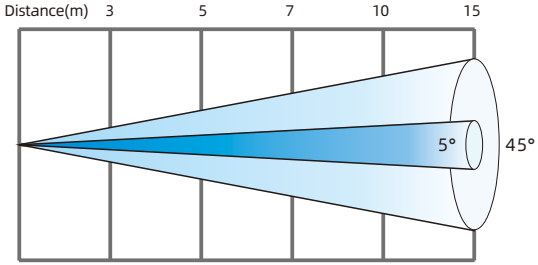

5° Lux R	13750	4950	2526	1238	550
G	27417	9870	5036	2468	1097
B	6069	2185	1115	546	243
W	41322	14876	7590	3719	1653
RGBW	88889	32000	16327	8000	3556
Diameter(m)	0.26	0.44	0.61	0.87	1.31
45° Lux R	817	294	150	74	33
G	1611	580	296	145	64
B	372	134	68	34	15
W	2439	878	448	220	98
RGBW	4894	1762	899	441	196
Diameter(m)	2.48	4.14	5.80	8.28	12.42

2.1.Attachment And Size

Attachment contents-Fig.1

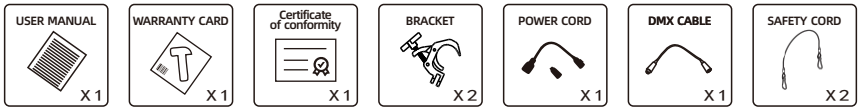

Size-Fig.2 (Unit:mm)

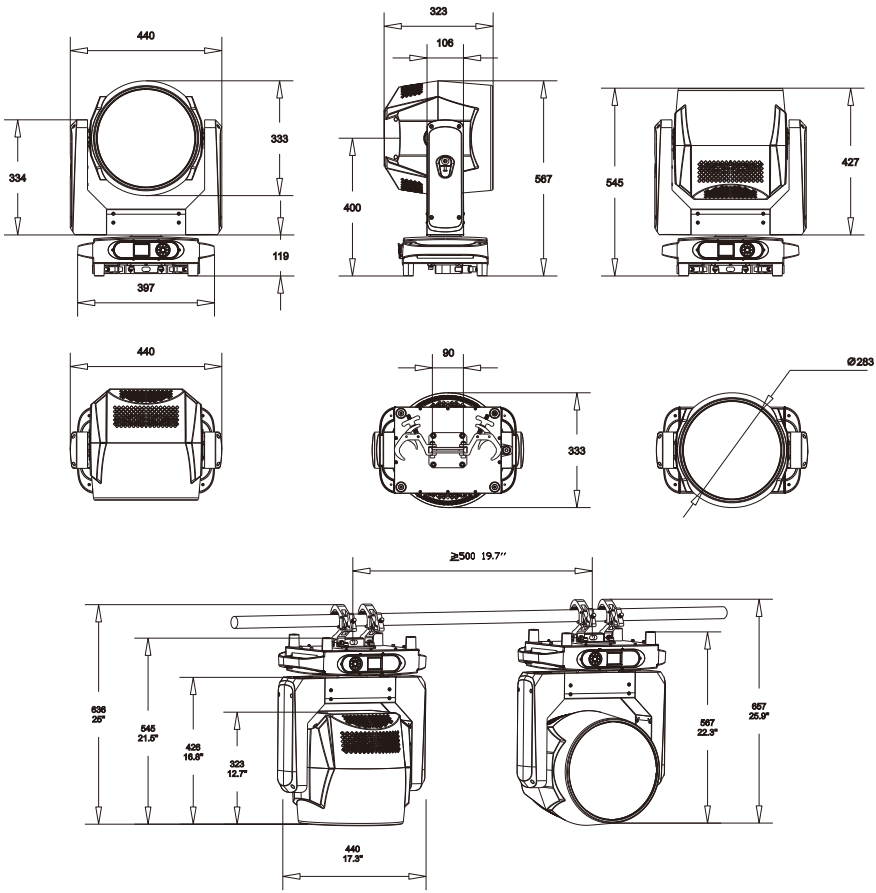

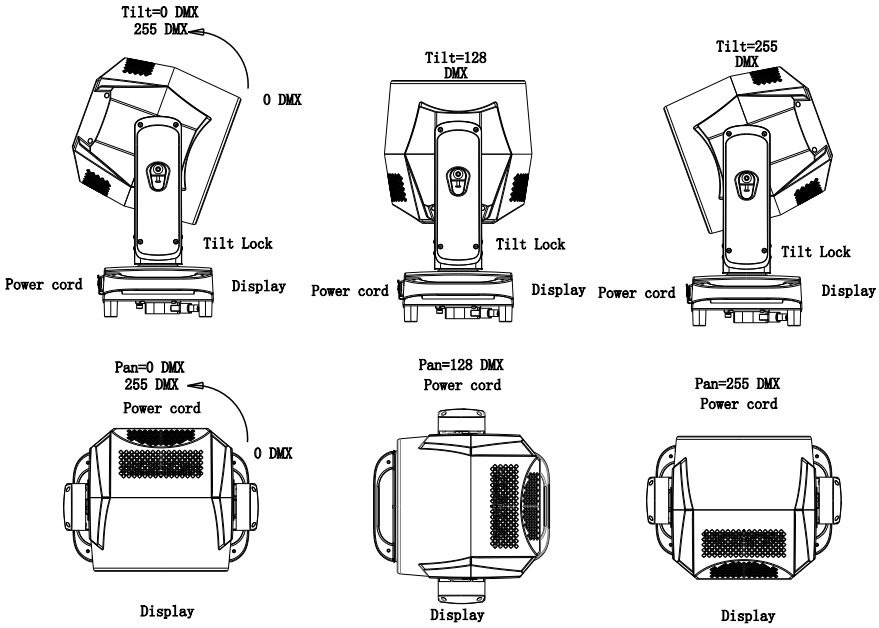
Tilt=0 DMX
255 DMX
0 DMX
Tilt Lock
Power cord
Display
Tilt=128
DMX
Tilt Lock
Power cord
Display
Tilt=255
DMX
Tilt Lock
Power cord
Display
Pan=0 DMX
255 DMX
Power cord
0 DMX
Display
Pan=128 DMX
Power cord
Display
Pan=255 DMX
Power cord
Display

3.Connection and control

3.1.Power supply connection

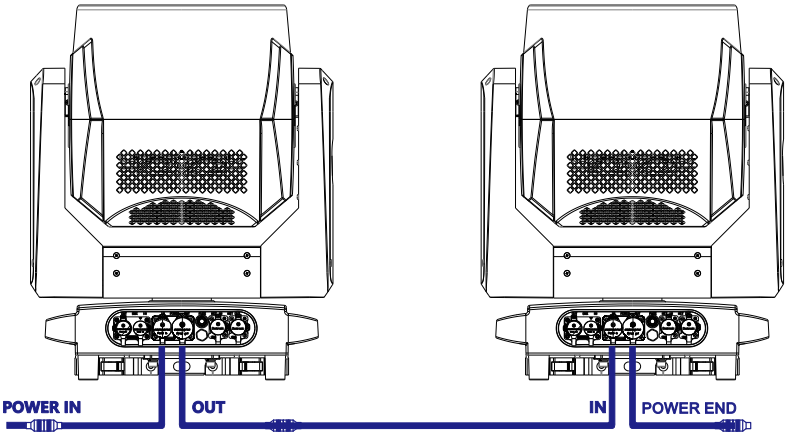

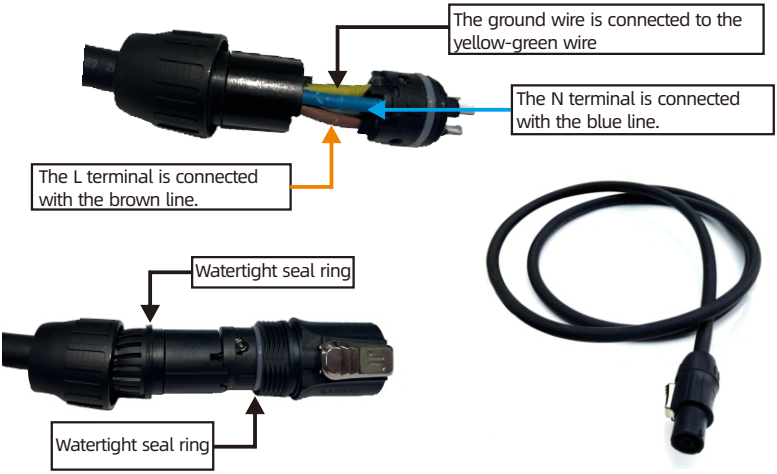

- The bus connecting the power supply must be installed by a qualified professional technician.
- After completing all the above operations and ensuring that it is installed, you can power on the lamp to operate.

3.2.DMX 512 Connection

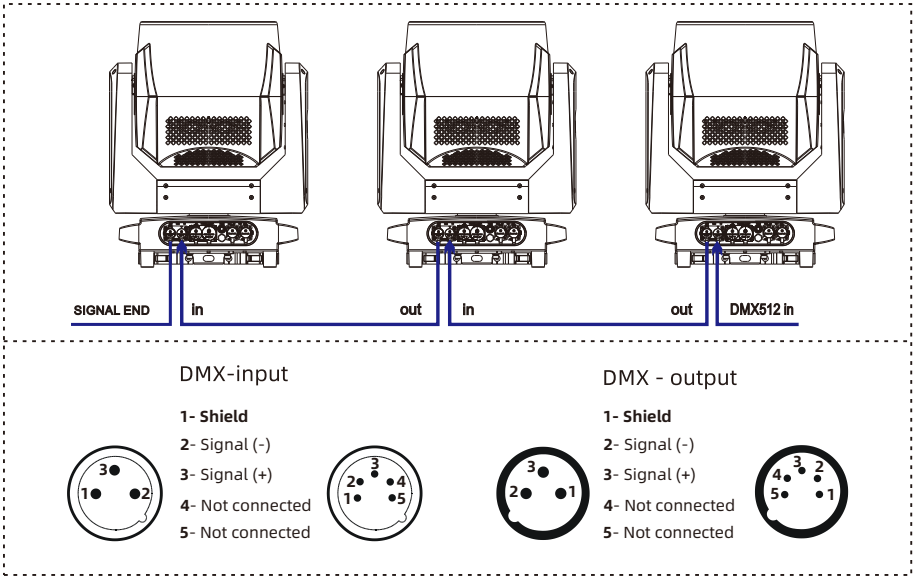

1. At last unit, the DMX cable has to be terminated with a terminator. Solder a 120 Ω 1/4W resistor between pin 2(DMX-) and pin 3(DMX+) into a 3-pin XLR-plug and plug it in the DMX-output of the last unit.

2. Connect the unit together in a "daisy chain" by XLR plug cable from the output of the unit to the input of the next unit. The cable cannot be branched or split to a "Y" cable. DMX 512 is a very high-speed signal. Inadequate or damaged cables, soldered joints or corroded connectors can easily distort the signal and shut down the system.

3. The DMX output and input connectors are pass-through to maintain the DMX circuit, when one of the units' power is disconnected.

4. Each lighting unit needs to have a DMX address to receive the data by the controller. The address number is between 1-512.

5. The end of the DMX 512 system should be terminated to reduce signal errors.

6. 3 pin XLR connectors are more popular than 5 pins XLR.

3 pin XLR: Pin 1: GND, Pin 2: Negative signal (-), Pin 3: Positive signal (+)

5 pin XLR: Pin 1: GND, Pin 2: Negative signal (-), Pin 3: Positive signal (+), Pin4, Pin5 not used.

3.3.Control Panel

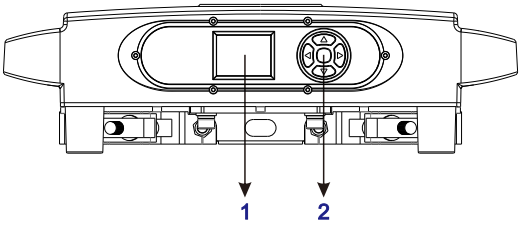

1.Display: To show the various menus and the selected function.
2.Button:

OK	OK confirmation key
▲	UP
▼	DOWN
◀	To the left
▶	To the right

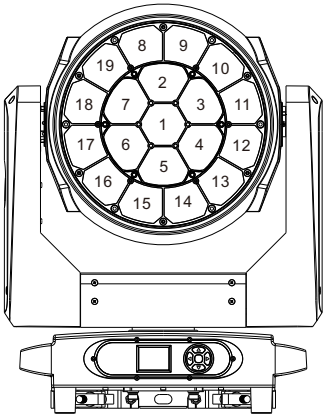

Light source control sequence

4.How To Set The Unit

4.1.Main Function

The lamp is powered on. When the system initialization and lamp reset are completed, and the standby interface is displayed on the display screen, press OK to enter the preset menu interface.
The main functions are as follows:

Main menu	I menu	II menu	III menu	Note
Dmx Setting	1.Address	001-512		
	2.Channel	26CH、98CH、28CH、100CH、35CH		
	3.State	Black/Hold		
	4.InputMode	DMX ARTNET sACN		ARTNET/SACN can only be selected when there is an ARTNET module available
	5.DmxAddressLock	OFF/ON(Default)		
Information	1.Time	Total Power Time ***H		
		Power Time ***H		
		Total Light Time ***H		
		Light time ***H		
	2.Temperature	Head Temp ****℃		
	3.Fan Information	LedFan1Vol ***V		
		LedFan2Vol ***V		
		LedFan1Sp ***R		
		LedFan2Sp ***R		
		LedFan3Sp ***R		
		LedFan4Sp ***R		
		BaseFanVol ***V		
		BaseFan1Sp ***R		
		BaseFan2Sp ***R		
	4.Fixture Status	MCU(XY) ***		
		MCU(LED) ***		
		MCU(ZOOM) ***		
		Pan ***		
		Tilt ***		
		Zoom ***		
		Zoom Rot ***		
		LedFan1 ***		
		LedFan2 ***		
		LedFan3 ***		
		LedFan4 ***		
		BaseFan1 ***		
		BaseFan2 ***		
	5.RDM UID	3888:********		
	6.DMX Live	1.Pan ***		
		2.PanFine ***		
		3.....		
	7.Software	1.Display Ver. Vxxx		
		2.XY Ver. Vxxx		
		3.LED Ver. Vxxx		
		4.ZOOM Ver. Vxxx		
		5.ETH Ver. Vxxx		This menu can only be displayed when the artnet module is connected
	1.Dimmer&Fan Setting	1.Dimmer Curve	Linear(Default) Square I-Square S-Curve	
		2.Dimmer Freq	1800HZ 3600HZ 7200HZ（Default） 25000HZ	
		3.Dimmer Speed	Normal（Default） Smooth 1 Smooth 2 Smooth 3	

Main menu	I menu	II menu	III menu	Note
Personality		4.Fan Mode	Standard (Default) High Output Silent	
	2.PanTilt Setting	1.Pan Invert	OFF/ON	
		2.Tilt Invert	OFF/ON	
		3.P/T Rectify	OFF/ON	
		4.P/T Mode	Normal (Default) Fast Precise	
	3.Display Setting	1.Language	EN (Default) /ZH	
		3.Dis.Direction	Forward (Default) /Reverse	
		4.Dis.Blink	OFF/ON	
	4.LED Setting	1.iCC	OFF/ON (Default)	
	5.Ethernet Setting	IP Address	***.***.***.***	This menu can only be displayed when the artnet module is connected
		Mask Address	***.***.***.***	
		Universe Address	0-32767	
		sACN Universe Address	1-63999	
		DHCP	OFF (Default) /ON	
		Ethernet To DMX	OFF (Default) /ON	
Manual	1.Channel	1.Pan ***		
		2.Pan Fine ***		
		3.....		
	2.Reset	1.PanTilt		
		2.Head Module		
		3.All		
Service	1.Calibrate	1.Pan ***		
		2.Tilt ***		
		3.Zoom ***		
		4.Zoom Rot ***		
		5.Red1 ***		
		6.Green1 ***		
		7.Blue1 ***		
		8.White1 ***		
		9.Red2 ***		
		10.Green2 ***		
		11.Blue2 ***		
		12.White2 ***		
		.....		
		52.Red19 ***		
		53.Green19 ***		
		54.Blue19 ***		
		55.White19 ***		
	2.Factory Reset	Password: 1111	NO/YES	
	3.Reset timers			
	4.Developer			
	5.Firmware update			
Language	EN			
	ZH			
Test	1.Test PanTilt	Running:Step ***/***		
	2.Test Head Module	Running:Step ***/***		
	3.Test All	Running:Step ***/***		
Display Rotate	Normal			
	Rotate 180			

4.2.Address Setting

Enter MENU, select the DMX setting function, select the address code setting, press the OK button to confirm, the current DMX address will be displayed on the display. Use the p/down buttons to select addresses 001~512, and press the OK button to save. Press the OK button to return to the previous menu.

Please refer to the following diagram to address your DMX512 channel for the first 4 units.

Channel mode	Unit 1 Address	Unit 2 Address	Unit 3 Address	Unit 4 Address
26 CH	1	27	53	79
98 CH	1	99	197	295
35 CH	1	36	71	106
28 CH	1	29	57	85
100 CH	1	101	201	301

4.3.DMX 512 Configuration

Please control the fixture by referring to the configurations below

26 Channel	98 Channel	DMX VALUE	FUNCTION	Note
1	1	0-255	**Pan**	
2	2	0-255	**Pan Fine**	
3	3	0-255	**Tilt**	
4	4	0-255	**Tilt Fine**	
5	5		**Function**	
		0-25	No Function	
		26-35	Zoom Reset	
		36-45	P/T Reset	
		46-55	System Reset	
		56-255	No Function	
6	6	0-255	**Zoom**	
7	7		**Zoom Rota**	
		0-127	Lens Angle	
		128-190	CW Rotation speed Fast to slow	
		191-192	Stop rotation	
		193-255	CCW Rotation speed,slow to fast	
8	8	0-255	**Dimmer**	
9	9	0-255	**Dimmer Fine**	
10	10		**Shutter**	
		0-9	No Function	
		10-49	Slow closing, Fast opening, fast to slow	
		50-89	Fast closing, Slow opening, fast to slow	
		90-119	Slow closing, Slow open, fast to slow	
		120-179	Random strobe, Slow to Fast	
		180-249	Synchronous strobe, slow to fast	
		250-255	No Function	
11	11		**Macro**	
		0-4	No Function	
		5-185	Fixed color	
		186-195	Color wheel change speed from fast to slow	
		196-205	Color wheel change speed from fast to slow	
		206-215	Color wheel change speed from fast to slow	
		216-225	Color wheel change speed from fast to slow	
		226-235	Rainbow color speed from slow to fast	
		236-245	Rainbow color speed from slow to fast	
		246-255	Rainbow color speed from slow to fast	
12	12		**CCT**	
		0-2	No Function	
		3-255	CCT color 2500K-10000K	
		3	2500K	
		23	2700K	
		43	3000K	
		63	3200K	
		83	3500K	
		103	3700K	
		120	4000K	
		135	4500K	
		150	5000K	
		162	5600K	
		180	6000K	
		195	6500K	
		210	7000K	

26 Channel	98 Channel	DMX VALUE	FUNCTION	Note
		219	7500K	
		225	8000K	
		234	8500K	
		240	9000K	
		249	9500K	
		255	10000K	
			Static Effect	
13	**13**	0-7	No Function	
		8-149	Static Scene1-141	141 scenes
		150-255	No Function	
			Dynamic Effect	
14	**14**	8-80	Dynamic scene 1-38(2 dmx for every scene)	38 scenes
		81-255	No Function	
			Dynamic Effect Speed	
15	**15**	0-127	Forwards move led effect speed from fast to slow	
		127-128	Stop	
		129-255	Backwards move led effect speed from slow to fast	
			LED Effect Delay	
16	**16**	0-255	Move LED effect delay from fast to slow	
			Background Color	
17	**17**	0-1	No Function	
		2-255	Color for background	
			Background Dimmer	
18	**18**	0-255	Background dimmer from 0% to 100% (0=default)	
19	**/**	0-255	**Red (0%-100%)**	
20	**/**	0-255	**Green (0%-100%)**	
21	**/**	0-255	**Blue (0%-100%)**	
22	**/**	0-255	**White (0%-100%)**	
/	**19**	0-255	Red1 (0%-100%)	
/	**20**	0-255	Green1 (0%-100%)	
/	**21**	0-255	Blue1 (0%-100%)	
/	**22**	0-255	White1 (0%-100%)	
/	**23**	0-255	Red2 (0%-100%)	
/	**24**	0-255	Green2 (0%-100%)	
/	**25**	0-255	Blue2 (0%-100%)	
/	**26**	0-255	White2 (0%-100%)	
/	**27**	0-255	Red3 (0%-100%)	
/	**28**	0-255	Green3 (0%-100%)	
/	**29**	0-255	Blue3 (0%-100%)	
/	**30**	0-255	White3 (0%-100%)	
/	**31**	0-255	Red4 (0%-100%)	
/	**32**	0-255	Green4 (0%-100%)	
/	**33**	0-255	Blue4 (0%-100%)	
/	**34**	0-255	White4 (0%-100%)	
/	**35**	0-255	Red5 (0%-100%)	
/	**36**	0-255	Green5 (0%-100%)	
/	**37**	0-255	Blue5 (0%-100%)	
/	**38**	0-255	White5 (0%-100%)	
/	**39**	0-255	Red6 (0%-100%)	
/	**40**	0-255	Green6 (0%-100%)	
/	**41**	0-255	Blue6 (0%-100%)	
/	**42**	0-255	White6 (0%-100%)	

26 Channel	98 Channel	DMX VALUE	FUNCTION	Note
/	43	0-255	Red7 (0%-100%)	
/	44	0-255	Green7 (0%-100%)	
/	45	0-255	Blue7 (0%-100%)	
/	46	0-255	White7 (0%-100%)	
/	47	0-255	Red8 (0%-100%)	
/	48	0-255	Green8 (0%-100%)	
/	49	0-255	Blue8 (0%-100%)	
/	50	0-255	White8(0%-100%)	
/	51	0-255	Red9 (0%-100%)	
/	52	0-255	Green9 (0%-100%)	
/	53	0-255	Blue9 (0%-100%)	
/	54	0-255	White9 (0%-100%)	
/	55	0-255	Red10 (0%-100%)	
/	56	0-255	Green10(0%-100%)	
/	57	0-255	Blue10(0%-100%)	
/	58	0-255	White10(0%-100%)	
/	59	0-255	Red11(0%-100%)	
/	60	0-255	Green11(0%-100%)	
/	61	0-255	Blue11(0%-100%)	
/	62	0-255	White11(0%-100%)	
/	63	0-255	Red12 (0%-100%)	
/	64	0-255	Green12(0%-100%)	
/	65	0-255	Blue12(0%-100%)	
/	66	0-255	White12(0%-100%)	
/	67	0-255	Red13 (0%-100%)	
/	68	0-255	Green13(0%-100%)	
/	69	0-255	Blue13(0%-100%)	
/	70	0-255	White13(0%-100%)	
/	71	0-255	Red12 (0%-100%)	
/	72	0-255	Green12(0%-100%)	
/	73	0-255	Blue12(0%-100%)	
/	74	0-255	White12(0%-100%)	
/	75	0-255	Red12 (0%-100%)	
/	76	0-255	Green12(0%-100%)	
/	77	0-255	Blue12(0%-100%)	
/	78	0-255	White12(0%-100%)	
/	79	0-255	Red12 (0%-100%)	
/	80	0-255	Green12(0%-100%)	
/	81	0-255	Blue12(0%-100%)	
/	82	0-255	White12(0%-100%)	
/	83	0-255	Red12 (0%-100%)	
/	84	0-255	Green12(0%-100%)	
/	85	0-255	Blue12(0%-100%)	
/	86	0-255	White12(0%-100%)	
/	87	0-255	Red12 (0%-100%)	
/	88	0-255	Green12(0%-100%)	
/	89	0-255	Blue12(0%-100%)	
/	90	0-255	White12(0%-100%)	
/	91	0-255	Red12 (0%-100%)	
/	92	0-255	Green12(0%-100%)	
/	93	0-255	Blue12(0%-100%)	
/	94	0-255	White12(0%-100%)	

26 Channel	98 Channel	DMX VALUE	FUNCTION	Note
23	**95**	0-255	LED ring Dimmer from 0% to 100% (0=default)	
24	**96**		LED ring Color Macro	
		0	No Function	
		1	LED ring Red	
		2	LED ring Green	
		3	LED ring Blue	
		4	LED ring White	
		5-204	LED ring Fixed color	
		205-214	LED ring color wheel change speed from fast to slow	
		215-224	LED ring color wheel change speed from fast to slow	
		225-234	LED ring color wheel change speed from fast to slow	
		235-244	LED ring color wheel change speed from fast to slow	
		245-255	No Function	
25	**97**		LED ring Effect Macro	
		0-4	No Function	
		5-47	LED ring dynamic scene 1-16(3 dmx for every scene)	User specified color
		48-99	LED ring dynamic scene 1-17(3 dmx for every scene)	Built in color
		100-255	LED ring dynamic scene, color change	Not associated with color macros
26	**98**		**LED ring Effect Speed**	
		0-255	LED ring Effect Speed from fast to slow	

28 Channel	100 Channel	DMX VALUE	FUNCTION	Note
1	1	0-255	**Pan**	
2	2	0-255	**Pan Fine**	
3	3	0-255	**Tilt**	
4	4	0-255	**Tilt Fine**	
5	5		**Function**	
		0-25	No Function	
		26-30	Zoom Reset	
		31-40	P/T Reset	
		41-50	Fixture Reset	
		51-55	Fan mode: Standard	
		56-60	Fan mode: High Output	
		61-65	Fan mode: Silent	
		66-70	No Function	
		71-75	Display blink on	
		76-80	Display blink off	
		81-85	Display on	
		86-90	Display off	
		91-95	Pan invert on	
		96-100	Pan invert off	
		101-105	Tilt invert on	
		106-110	Tilt invert off	
		111-115	Dimmer frequence:1800HZ	
		116-120	Dimmer frequence:3600HZ	
		121-125	Dimmer frequence:7200HZ	
		126-130	Dimmer frequence:25000HZ	
		131-135	Dimmer curve: Linear	
		136-140	Dimmer curve: Square	
		141-145	Dimmer curve: Inv-square	
		146-150	Dimmer curve: S-Curve	
		151-155	Dimmer speed:Normal	
		156-160	Dimmer speed:Smooth 1	
		161-165	Dimmer speed:Smooth 2	
		166-170	Dimmer speed:Smooth 3	
		171-175	XY Normal mode	
		176-180	XY Fast mode	
		181-185	XY Precise mode	
		186-190	iCC on	
		191-195	iCC off	
		196-200	Zoom Limit Power On	
		201-205	Zoom Limit Power Off	
		206-255	No Function	
6	6	0-255	**Zoom**	
7	7		**Zoom Rota**	
		0-127	Lens Angle	
		128-190	CW Rotation speed Fast to slow	
		191-192	Stop rotation	
		193-255	CCW Rotation speed,slow to fast	
8	8	0-255	**Dimmer**	
9	9	0-255	**Dimmer Fine**	
10	10		**Shutter**	
		0-9	No Function	
		10-49	Slow closing, Fast opening, fast to slow	
		50-89	Fast closing, Slow opening, fast to slow	
		90-119	Slow closing, Slow open, fast to slow	
		120-179	Random strobe, Slow to Fast	

28 Channel	100 Channel	DMX VALUE	FUNCTION	Note
		180-249	Synchronous strobe, slow to fast	
		250-255	No Function	
			Macro	
		0-4	No Function	
		5-19	CCT	
		20	LEE 002 Rose Pink	
		21	LEE 004 Medium Bastard Amber	
		22	LEE 007 Pale Yellow	
		23	LEE 008 Dark Salmon	
		24	LEE 009 Pale Amber Gold	
		25	LEE 010 Medium Yellow	
		26	LEE 013 Straw Tint	
		27	LEE 015 Deep Straw	
		28	LEE 017 Surprise Peach	
		29	LEE 020 Medium Amber	
		30	LEE 022 Dark Amber	
		31	LEE 025 Sunset Red	
		32	LEE 026 Bright Red	
		33	LEE 036 Medium Pink	
		34	LEE 048 Rose Purple	
		35	LEE 058 Lavender	
		36	LEE 063 Pale Blue	
		37	LEE 068 Sky Blue	
		38	LEE 071 Tokyo Blue	
		39	LEE 075 Evening Blue	
		40	LEE 088 Lime Green	
		41	LEE 089 Moss Green	
		42	LEE 090 Dark Yellow Green	
		43	LEE 101 Yellow	
		44	LEE 103 Straw	
		45	LEE 104 Deep Amber	
		46	LEE 105 Orange	
		47	LEE 106 Primary Red	
		48	LEE 107 Light Rose	
		49	LEE 108 English Rose	
		50	LEE 109 Light Salmon	
		51	LEE 110 Middle Rose	
		52	LEE 111 Dark Pink	
		53	LEE 113 Magenta	
		54	LEE 115 Peacock Blue	
		55	LEE 117 Steel Blue	
		56	LEE 118 Light Blue	
		57	LEE 119 Dark Blue	
		58	LEE 121 LEE Green	
		59	LEE 122 Fern Green	
		60	LEE 124 Dark Green	
		61	LEE 126 Mauve	
		62	LEE 127 Smokey Pink	
		63	LEE 128 Bright Pink	
		64	LEE 131 Marine Blue	
		65	LEE 132 Medium Blue	
		66	LEE 134 Golden Amber	
		67	LEE 135 Deep Golden Amber	

28 Channel	100 Channel	DMX VALUE	FUNCTION	Note
		68	LEE 137 Special Lavender	
		69	LEE 138 Pale Green	
		70	LEE 139 Primary Green	
		71	LEE 140 Summer Blue	
		72	LEE 141 Bright Blue	
		73	LEE 142 Pale Violet	
		74	LEE 143 Pale Navy Blue	
		75	LEE 144 No Colour Blue	
		76	LEE 147 Apricot	
		77	LEE 148 Bright Rose	
		78	LEE 151 Gold Tint	
		79	LEE 152 Pale Gold	
		80	LEE 153 Pale Salmon	
		81	LEE 154 Pale Rose	
		82	LEE 156 Chocolate	
		83	LEE 157 Pink	
		84	LEE 158 Deep Orange	
		85	LEE 161 Slate Blue	
		86	LEE 162 Bastard Amber	
		87	LEE 164 Flame Red	
		88	LEE 165 Daylight Blue	
		89	LEE 170 Deep Lavender	
		90	LEE 172 Lagoon Blue	
		91	LEE 174 Dark Steel Blue	
		92	LEE 176 Loving Amber	
		93	LEE 179 Chrome Orange	
		94	LEE 180 Dark Lavender	
		95	LEE 181 Congo Blue	
		96	LEE 183 Moonlight Blue	
		97	LEE 192 Flesh Pink	
		98	LEE 194 Surprise Pink	
		99	LEE 195 Zenith Blue	
		100	LEE 196 True Blue	
		101	LEE 197 Alice Blue	
		102	LEE 198 Palace Blue	
		103	LEE 199 Regal Blue	
		104	LEE 200 Double CTB	
		105	LEE 201 Full CTB	
		106	LEE 202 Half CTB	
		107	LEE 203 Quarter CTB	
11	**11**	108	LEE 204 Full CTO	
		109	LEE 205 Half CTO	
		110	LEE 206 Quarter CTO	
		111	LEE 207 Full CTO + .3 ND	
		112	LEE 208 Full CTO + .6 ND	
		113	LEE 212 LCT Yellow (Y1)	
		114	LEE 213 White Flame Green	
		115	LEE 219 LEE Fluorescent Green	
		116	LEE 230 Super Correction LCT Yellow	
		117	LEE 232 Super Correction W.F. Green	
		118	LEE 236 HMI (to Tungsten)	
		119	LEE 237 CID (to Tungsten)	
		120	LEE 238 CSI (to Tungsten)	

28 Channel	100 Channel	DMX VALUE	FUNCTION	Note
		121	LEE 241 LEE Fluorescent	
		122	LEE 242 LEE Fluorescent	
		123	LEE 243 LEE Fluorescent	
		124	LEE 244 LEE Plus Green	
		125	LEE 245 Half Plus Green	
		126	LEE 247 LEE Minus Green	
		127	LEE 248 Half Minus Green	
		128	LEE 249 Quarter Minus Green	
		129	LEE 281 Three Quarter CTB	
		130	LEE 283 One and a Half CTB	
		131	LEE 285 Three Quarter CTO	
		132	LEE 286 One and a Half CTO	
		133	LEE 287 Double CTO	
		134	LEE 322 Soft Green	
		135	LEE 323 Jade	
		136	LEE 327 Forest Green	
		137	LEE 328 Follies Pink	
		138	LEE 332 Special Rose Pink	
		139	LEE 343 Special Medium Lavender	
		140	LEE 345 Fuchsia Pink	
		141	LEE 352 Glacier Blue	
		142	LEE 353 Lighter Blue	
		143	LEE 354 Special Steel Blue	
		144	LEE 363 Special Medium Blue	
		145	LEE 366 Cornflower	
		146	LEE 441 Full CT Straw	
		147	LEE 442 Half CT Straw	
		148	LEE 444 Eighth CT Straw	
		149	LEE 500 Double New Colour Blue	
		150	LEE 501 New Colour Blue (Robertson Blue)	
		151	LEE 502 Half New Colour Blue	
		152	LEE 504 Waterfront Green	
		153	LEE 505 Sally Green	
		154	LEE 506 Marlene	
		155	LEE 507 Madge	
		156	LEE 508 Midnight Maya	
		157	LEE 525 Argent Blue	
		158	LEE 550 ALD Gold	
		159	LEE 604 Full CT Eight Five	
		160	LEE 650 Industry Sodium	
		161	LEE 651 HI Sodium	
		162	LEE 652 Urban Sodium	
		163	LEE 700 Perfect Lavender	
		164	LEE 701 Provence	
		165	LEE 702 Special Pale Lavender	
		166	LEE 703 Cold Lavender	
		167	LEE 704 Lily	
		168	LEE 706 King Fals Lavender	
		169	LEE 708 Cool Lavender	
		170	LEE 709 Electric Lilac	
		171	LEE 710 Spir Special Blue	
		172	LEE 711 Cold Blue	
		173	LEE 712 Bedford Blue	

28 Channel	100 Channel	DMX VALUE	FUNCTION	Note
		174	LEE 714 Elysian Blue	
		175	LEE 715 Cabana Blue	
		176	LEE 716 Mikkel Blue	
		177	LEE 719 Colour Wash Blue	
		178	LEE 721 Berry Blue	
		179	LEE 722 Bray Blue	
		180	LEE 723 Virgin Blue	
		181	LEE 724 Ocean Blue	
		182	LEE 725 Old Steel Blue	
		183	LEE 727 QFD Blue	
		184	LEE 728 Steel Green	
		185	LEE 729 Scuba Blue	
		186	LEE 736 Twickenham Green	
		187	LEE 738 JAS Green	
		188	LEE 742 Bram Brown	
		189	LEE 744 Dirty White	
		190	LEE 747 Easy White	
		191	LEE 748 Seedy Pink	
		192	LEE 763 Wheat	
		193-195	Color wheel change speed from fast to slow	
		196-205	Color wheel change speed from fast to slow	
		206-215	Color wheel change speed from fast to slow	
		216-225	Color wheel change speed from fast to slow	
		226-235	Rainbow color speed from slow to fast	
		236-245	Rainbow color speed from slow to fast	
		246-255	Rainbow color speed from slow to fast	
12	**12**		**CCT**	
		0-2	No Function	
		3-255	CCT color 10000K-2500K	10000K-2500K
		3	10000K	
		19	9500K	
		36	9000K	
		53	8500K	
		70	8000k	
		76	7800K	
		87	7500K	
		97	7200K	
		103	7000K	
		120	6500K	
		131	6200K	
		138	6000K	
		144	5800K	
		150	5600K	
		157	5400K	
		165	5200K	
		171	5000K	
		177	4800K	
		188	4500K	
		198	4200K	
		204	4000K	
		211	3800K	
		221	3500K	
		231	3200K	

28 Channel	100 Channel	DMX VALUE	FUNCTION	Note
		238	3000K	
		248	2700K	
		255	2500K	
13	13		**Static Effect**	
		0-7	No Function	
		8-149	Static Scene1-141	141 scenes
		150-255	No Function	
14	14		**Dynamic Effect**	
		8-80	Dynamic scene 1-38(2 dmx for every scene)	38 scenes
		81-255	No Function	
15	15		**Dynamic Effect Speed**	
		0-127	Forwards move led effect speed from fast to slow	
		127-128	Stop	
		129-255	Backwards move led effect speed from slow to fast	
16	16		**LED Effect Delay**	
		0-255	Move LED effect delay from fast to slow	
17	17		**Background Color**	
		0-1	No Function	
		2-255	Color for background	
18	18		**Background Dimmer**	
		0-255	Background dimmer from 0% to 100% (0=default)	
19	/	0-255	**Red (0%-100%)**	
20	/	0-255	**Green (0%-100%)**	
21	/	0-255	**Blue (0%-100%)**	
22	/	0-255	**White (0%-100%)**	
/	19	0-255	Red1 (0%-100%)	
/	20	0-255	Green1 (0%-100%)	
/	21	0-255	Blue1 (0%-100%)	
/	22	0-255	White1 (0%-100%)	
/	23	0-255	Red2 (0%-100%)	
/	24	0-255	Green2 (0%-100%)	
/	25	0-255	Blue2 (0%-100%)	
/	26	0-255	White2 (0%-100%)	
/	27	0-255	Red3 (0%-100%)	
/	28	0-255	Green3 (0%-100%)	
/	29	0-255	Blue3 (0%-100%)	
/	30	0-255	White3 (0%-100%)	
/	31	0-255	Red4 (0%-100%)	
/	32	0-255	Green4 (0%-100%)	
/	33	0-255	Blue4 (0%-100%)	
/	34	0-255	White4 (0%-100%)	
/	35	0-255	Red5 (0%-100%)	
/	36	0-255	Green5 (0%-100%)	
/	37	0-255	Blue5 (0%-100%)	
/	38	0-255	White5 (0%-100%)	
/	39	0-255	Red6 (0%-100%)	
/	40	0-255	Green6 (0%-100%)	
/	41	0-255	Blue6 (0%-100%)	
/	42	0-255	White6 (0%-100%)	
/	43	0-255	Red7 (0%-100%)	
/	44	0-255	Green7 (0%-100%)	
/	45	0-255	Blue7 (0%-100%)	
/	46	0-255	White7 (0%-100%)	

28 Channel	100 Channel	DMX VALUE	FUNCTION	Note
/	47	0-255	Red8 (0%-100%)	
/	48	0-255	Green8 (0%-100%)	
/	49	0-255	Blue8 (0%-100%)	
/	50	0-255	White8(0%-100%)	
/	51	0-255	Red9 (0%-100%)	
/	52	0-255	Green9 (0%-100%)	
/	53	0-255	Blue9 (0%-100%)	
/	54	0-255	White9 (0%-100%)	
/	55	0-255	Red10 (0%-100%)	
/	56	0-255	Green10(0%-100%)	
/	57	0-255	Blue10(0%-100%)	
/	58	0-255	White10(0%-100%)	
/	59	0-255	Red11(0%-100%)	
/	60	0-255	Green11(0%-100%)	
/	61	0-255	Blue11(0%-100%)	
/	62	0-255	White11(0%-100%)	
/	63	0-255	Red12 (0%-100%)	
/	64	0-255	Green12(0%-100%)	
/	65	0-255	Blue12(0%-100%)	
/	66	0-255	White12(0%-100%)	
/	67	0-255	Red13 (0%-100%)	
/	68	0-255	Green13(0%-100%)	
/	69	0-255	Blue13(0%-100%)	
/	70	0-255	White13(0%-100%)	
/	71	0-255	Red12 (0%-100%)	
/	72	0-255	Green12(0%-100%)	
/	73	0-255	Blue12(0%-100%)	
/	74	0-255	White12(0%-100%)	
/	75	0-255	Red12 (0%-100%)	
/	76	0-255	Green12(0%-100%)	
/	77	0-255	Blue12(0%-100%)	
/	78	0-255	White12(0%-100%)	
/	79	0-255	Red12 (0%-100%)	
/	80	0-255	Green12(0%-100%)	
/	81	0-255	Blue12(0%-100%)	
/	82	0-255	White12(0%-100%)	
/	83	0-255	Red12 (0%-100%)	
/	84	0-255	Green12(0%-100%)	
/	85	0-255	Blue12(0%-100%)	
/	86	0-255	White12(0%-100%)	
/	87	0-255	Red12 (0%-100%)	
/	88	0-255	Green12(0%-100%)	
/	89	0-255	Blue12(0%-100%)	
/	90	0-255	White12(0%-100%)	
/	91	0-255	Red12 (0%-100%)	
/	92	0-255	Green12(0%-100%)	
/	93	0-255	Blue12(0%-100%)	
/	94	0-255	White12(0%-100%)	
23	95	0-255	LED ring Dimmer from 0% to 100% (0=default)	
24	96	0-255	LED ring RED (0%-100%)	
25	97	0-255	LED ring GREEN (0%-100%)	
26	98	0-255	LED ring BLUE (0%-100%)	
			LED ring Effect Macro	

28 Channel	100 Channel	DMX VALUE	FUNCTION	Note
		0-9	Shutter open	
		10-19	Shutter closed	
27	**99**	20-39	Strobe speed from slow to fast	1→25 HZ
		40-255	Effect Macro	
		40-68	Dynamic scene 1-15 with user colors(2 dmx for every scene)	15 scenes
		69-255	Dynamic scene 1-63 with auto colors(3 dmx for every scene)	63 scenes
28	**100**		**LED ring Effect Speed**	
		0-255	LED ring Effect Speed from fast to slow	

35 Channel	DMX VALUE	FUNCTION	Note
1	0-255	**Red (0%-100%)**	
2	0-255	**Red Fine(0% -100%)**	
3	0-255	**Green (0%-100%)**	
4	0-255	**Green Fine(0% -100%)**	
5	0-255	**Blue (0%-100%)**	
6	0-255	**Blue Fine (0%-100%)**	
7	0-255	**White (0%-100%)**	
8	0-255	**White Fine (0%-100%)**	
9		**CCT**	
	0-9	No Function	
	10-255	CCT color 2500K-10000K	10000K-2500K
	10	2500K	
	23	2700K	
	43	3000K	
	63	3200K	
	83	3500K	
	103	3700K	
	120	4000K	
	135	4500K	
	150	5000K	
	162	5600K	
	180	6000K	
	195	6500K	
	210	7000K	
	219	7500K	
	225	8000K	
	234	8500K	
	240	9000K	
	249	9500K	
	255	10000K	
10		**Macro**	
	0-4	No Function	
	5-185	Fixed color	
	186-195	Color wheel change speed from fast to slow	
	196-205	Color wheel change speed from fast to slow	
	206-215	Color wheel change speed from fast to slow	
	216-225	Color wheel change speed from fast to slow	
	226-235	Rainbow color speed from slow to fast	
	236-245	Rainbow color speed from slow to fast	
	246-255	Rainbow color speed from slow to fast	
11		**Shutter**	
	0-9	No Function	
	10-49	Slow closing, Fast opening, fast to slow	
	50-89	Fast closing, Slow opening, fast to slow	
	90-119	Slow closing, Slow open, fast to slow	
	120-179	Random strobe, Slow to Fast	

35 Channel	DMX VALUE	FUNCTION	Note
	180-249	Synchronous strobe, slow to fast	
	250-255	No Function	
12	0-255	**Dimmer**	
13	0-255	**Dimmer Fine**	
14	0-255	**Pan**	
15	0-255	**Pan Fine**	
16	0-255	**Tilt**	
17	0-255	**Tilt Fine**	
18		**Function**	
	0-1	No Function	
	2-3	Fan mode: High Output	
	4-7	Fan mode: Silent	
	8-9	Fan mode: Standard	
	10-120	No Function	
	121-130	Dimmer frequence:25000HZ	
	131-140	Dimmer frequence:7200HZ	
	141-150	Dimmer frequence:3600HZ	
	151-160	Dimmer frequence:1800HZ	
	161-255	No Function	
19		**Reset**	
	0-25	No Function	
	26-70	Zoom Reset	
	71-127	P/T Reset	
	128-255	Fixture Reset	
20	0-255	**Zoom**	
21		**Zoom Rota**	
	0-127	Lens Angle	
	128-190	CW Rotation speed Fast to slow	
	191-192	Stop rotation	
	193-255	CCW Rotation speed,slow to fast	
22		**Shape Selection**	
	0-7	No Function	
	7-14	Static Effect	
	15-70	Dynamic Effect	
	71-255	No Function	
23		**Shape Speed**	
	0-63	Dynamic effect step selection	
	64-158	Forwards move led effect speed from fast to slow	
	159-160	Stop	
	161-255	Backwards move led effect speed from slow to fast	
24		**Shape Fade**	
	0-4	No Function	
	5-255	Move LED effect delay from fast to slow	
25		**Shape R(0%-100%)**	
	0-255	Shape red dimmer from 0% to 100% (0=default)	
26		**Shape G(0%-100%)**	

35 Channel	DMX VALUE	FUNCTION	Note
	0-255	Shape green dimmer from 0% to 100% (0=default)	
27		**Shape B(0%-100%)**	
	0-255	Shape blue dimmer from 0% to 100% (0=default)	
28		**Shape W(0%-100%)**	
	0-255	Shape white dimmer from 0% to 100% (0=default)	
29		**Shape Dimmer**	
	0-255	Shape dimmer from 0% to 100% (0=default)	
30		**Background Dimmer**	
	0-255	Background dimmer from 0% to 100% (0=default)	
31		**Shape Transition**	
	0-4	No Function	
	5-255	The switching LED effect is delayed from fast to slow	
32		**Shape Offset**	
	0-255	Shape step Offset	
33		**Foreground Strobe**	
	0-9	No Function	
	10-49	Slow closing, Fast opening, fast to slow	
	50-89	Fast closing, Slow opening, fast to slow	
	90-119	Slow closing, Slow open, fast to slow	
	120-179	Random strobe, Slow to Fast	
	180-249	Synchronous strobe, slow to fast	
	250-255	No Function	
34		**Background Strobe**	
	0-9	No Function	
	10-49	Slow closing, Fast opening, fast to slow	
	50-89	Fast closing, Slow opening, fast to slow	
	90-119	Slow closing, Slow open, fast to slow	
	120-179	Random strobe, Slow to Fast	
	180-249	Synchronous strobe, slow to fast	
	250-255	No Function	
35		**Background Select**	
	0-7	No Function	
	8-15	Background static Effect	
	16-255	No Function	

5.Electrical Connection Diagram

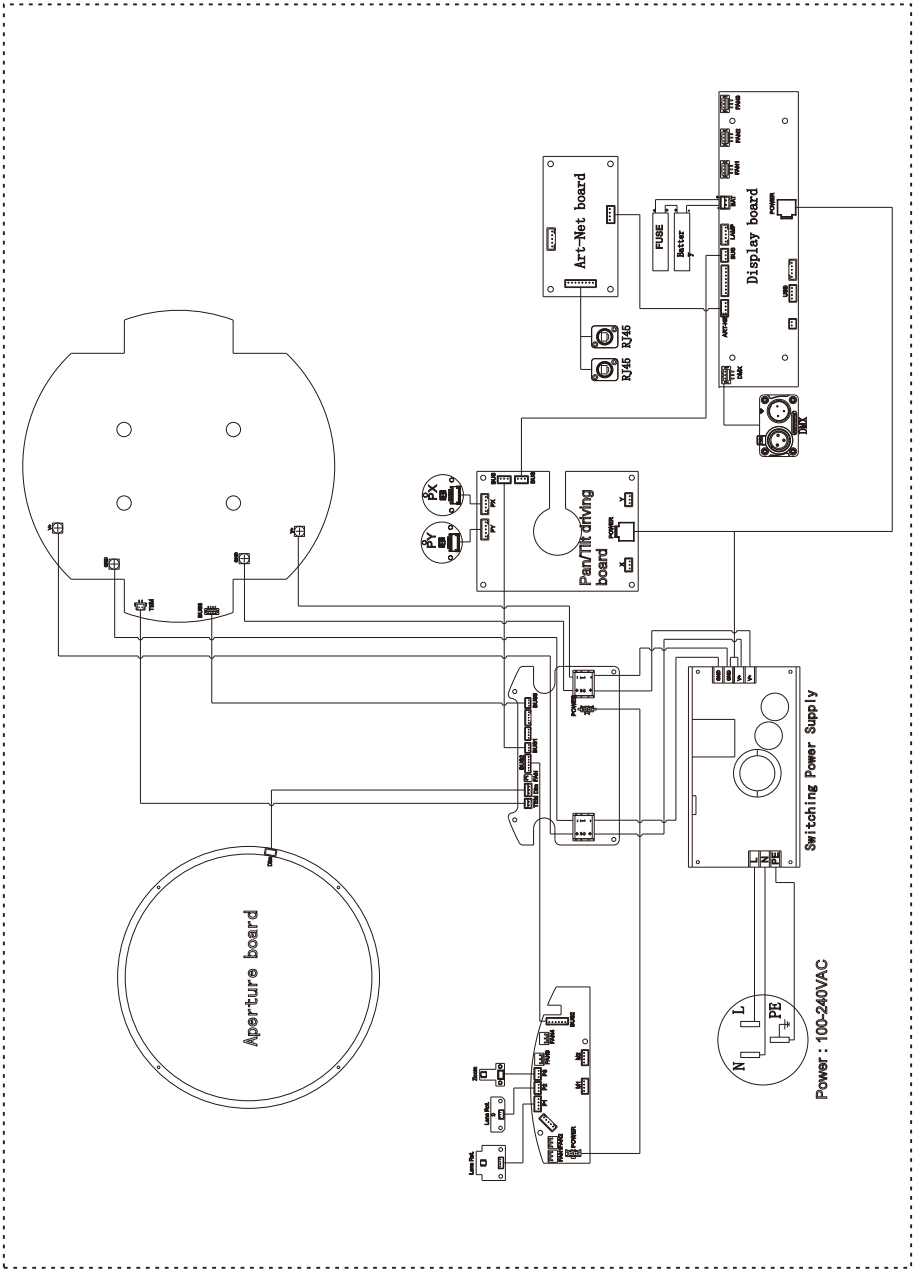

6.Troubleshooting

The following are common faults of lamps and corresponding solutions. Faults that cannot be repaired by yourself should be handled by professionally qualified personnel. Disconnect the power supply to the lamp during maintenance!

● The light source is not bright
- Check that a suitable light source is installed for the luminaire.
- Check whether the power supply connection of the lamp or the control switch is in poor contact.
- Check whether the light source has reached the end of its service life or is damaged, and replace it with a high-quality light source of the same specification.
- Measure whether the power supply is insufficient.
- Check whether the light source has not cooled down completely due to abnormal operation. Let the lamp cool down for more than 15 minutes to allow the light source to cool down. After returning to the normal start-up range, turn the power on again and it can be used normally.
- Check whether the DMX512 controller sends a command to turn on the light source.
- Check whether the light source and trigger circuit are disconnected or defective.
- Check whether the wiring terminals on the internal trigger are in poor contact and tighten the plug.
- Check the "Fan Speed and Voltage" in the "Basic Information" menu to see if the speed of FAN1/FAN2/FAN3 is above 500RPN. If it is below 500RPM, the light source will not light up. Replace the fan with the same specification.
- Check whether the over-temperature protection temperature switch inside the lamp is damaged. Go to the menu "Basic Information" and select "Equipment Temperature" to check - whether the temperature measuring plate shows that the temperature is too high or there is no temperature display.

● The beam appears dim and uneven
- The light source may have reached the end of its service life and does not emit enough light. Replace it with a light source of the same specification.
- Check whether there is dust accumulated in the optical part and clean it.
- Measure whether the power supply is insufficient.
- Finely adjust the screw device used to change the height of the lamp until the ideal light is achieved. Enter the menu "Service Options" and select "Calibration" to enter color and pattern adjustment, which can be adjusted to the center.

● The projected image is blurry
- Check whether the DMX512 controller channel value corresponding to the electronic focus system is suitable for the current projection distance.
- Check whether the mechanical part of the focusing system is stuck, remove the dust and add antifreeze and temperature-resistant lubricating oil.

● The light source of the lamp works intermittently
- Check whether the fan is running normally or is blocked by dust and paper debris.
- Check whether the inlet and outlet cooling air vents are blocked by dust.
- Check whether the lamp has reached the end of its service life.

- Check whether the power supply is insufficient, and whether the power switch and wiring are in poor contact or aging.
- Check whether the over-temperature protection temperature switch inside the lamp is damaged.

● Although it emits light, the lamp does not accept instructions from the controller

- Check whether the digital start address value and function options of the lamp are correct.
- Check whether the connection of the communication control line is correct. The communication line is too long or has been interrupted.
- Check whether the control equipment fails and whether the signal amplifier connected in series fails.
- Check whether the communication line is too long or if other devices interfere with each other.
- Optimize wiring, shorten the length of control signal lines, and route high-voltage and low-voltage lines separately
- Add signal amplifier isolator.
- The signal line is made of high-quality shielded twisted pair (impedance characteristic is 75Ω), and the signal terminal resistor is connected at the end of the lamp.
- Check that the circuit board communication IC or CPU is burned out because the bulb performs an abnormal operation when it is not completely cooled, causing the instantaneous ultra-high voltage leakage generated by the trigger, and replace the PCB board.

● The lamp cannot be started

- Check whether the power supply parameters match the lamps.
- Check whether the fuse at the light fixture's power input is blown.
- Check that the lamp has poor contact or falls off due to extrusion deformation, vibration of internal parts, moisture, etc. during long-distance transportation.
- Check whether the internal wires and connectors of the lamp are desoldered or loose.
- Check whether the electrical components of the lamp (such as power switch, transformer, ballast, capacitor, varistor, filter, power supply PCB board, motor control PCB board, etc.) are loose, short-circuited, burned out, etc.

● Some functions of the lamp cannot accept controller instructions

- Check whether the control device sends correct action instructions for these functions.
- Check whether the mechanical parts corresponding to these functions are loose or deformed.
- Check whether the motor sockets corresponding to these functions are loose or the corresponding driver chips are burned out.
- Check whether the motor wires corresponding to these functions are broken at the corners.
- Check whether the motors corresponding to these functions are damaged.

● During operation, the x or Y direction of the lamp does not move normally

- Click the previous step to check one by one.
- Check whether the corresponding drive belts in the X and Y directions of the lamp are detached or broken.
- Check whether the data feedback receiver (photoelectric sensor) corresponding to the X and Y directions in the lamp is damaged.
- Restart the computer and reset it once.

7.Fixture Cleaning

It is absolutely essential that the fixture is kept clean to ensure the maximum light-output and allow the fixture to function reliably throughout its life. The fixture must be cleaned regularly to avoid dust, dirt and smoke-fluid residues building up on or within the fixture. The cleaning frequency depends on the application environment. Clean the fixture immediately if the dust enters it to avoid damage to the optical lens due to excessive dust.

- A soft lint-free cloth moistened with any good glass cleaning fluid is recommended, under no circumstances should solvents be used.
- Always dry the parts carefully.
- Clean the external optical lens at least every 20 days and the internal optical lens every 30 days.



CAUTION ! ! !

Disconnect from mains before starting maintenance operation.

8.Duty exonerative and copyright protectio

- Light source belongs to consumption products, not within the scope of warranty.
- The manufacturer shall not bear any responsibility for any damage caused by failure to operate in accordance with this instruction.
- The manufacturer reserves the right of final interpretation for all information in this manual. For any questions, please refer to the official website.
- All the information in this manual shall not be copied without permission.
- The data contained in this statement are subject to change in the future without prior notice.